SILENT KNIGHT

Model IFP-100 Basic Operating Instructions

These Instructions must be framed and displayed next to the IFP-100 panel in accordance with NFPA 72 fire code for Local Protected Fire Alarm Systems. Test the system in accordance to NFPA 72.

Operation	Task to Perform
Silence Alarms and Troubles	Press SILENCE then enter a code if prompted. Silence LED will light.
Reset Alarms	Press RESET then enter a code if prompted.
Acknowledge Alarms and Troubles	Press ACK then enter a code if prompted. When the Alarm or Trouble is acknowledged an ■ will appear in the annunciator display as shown Below. TROUBLE: SMOKE-ION MODULE_33 POINT_1 [Z001] [M33:001] ■ MISSING 1 OF 1 Acknowledge Mark
View Alarms and Troubles	Press the ▽ or △ button to view Alarms and Troubles.
Conduct a Fire Drill	1. Press ENTER to access Main Menu, then enter a code if prompted. 2. Then press 1 to select System Tests. 3. Enter code if prompted, then press 1 to select Fire Drill. 4. Press ENTER to start the fire drill. 5. Press ENTER to end the fire drill.
View a Points Status	1. Press ENTER to access Main Menu, then enter a code if prompted. 2. Then press 2 to select Point Functions. 3. Enter code if prompted, then press 2 to select Point Status. 4. Select the module the device is located on by using the ▽ or △. Then press ENTER. 5. Enter the point number.
Check Detector Sensitivity	1. Follow steps 1 through 5 for viewing a point status. 2. Press ▷ to view detector sensitivity.
Set Time and Date	1. Press ENTER to access Main Menu, then enter a code if prompted. 2. Then press 4 to select Set Time & Date. Enter a code if prompted 3. Make changes in the fields on the screen as necessary. 4. Press ENTER if you wish to keep the changes. 5. Press ENTER to set the entered time and date.
Enable / Disable a Point	1. Press ENTER to access Main Menu, then enter a code if prompted. 2. Then press 2 to select Point Functions. 3. Enter code if prompted, then press 1 to select Disable / Enable Pt. 4. Select the module the point is located on by using the ▽ or △. Then press ENTER. 5. Enter the point number.
View Event History	1. Press ENTER to access Main Menu, then enter a code if prompted. 2. Press 3 to select Event History. 3. Press the ▽ or △ to view events in the history buffer.
For Service call:	

P/N 151287Rev. A

Integrated Voice Operation

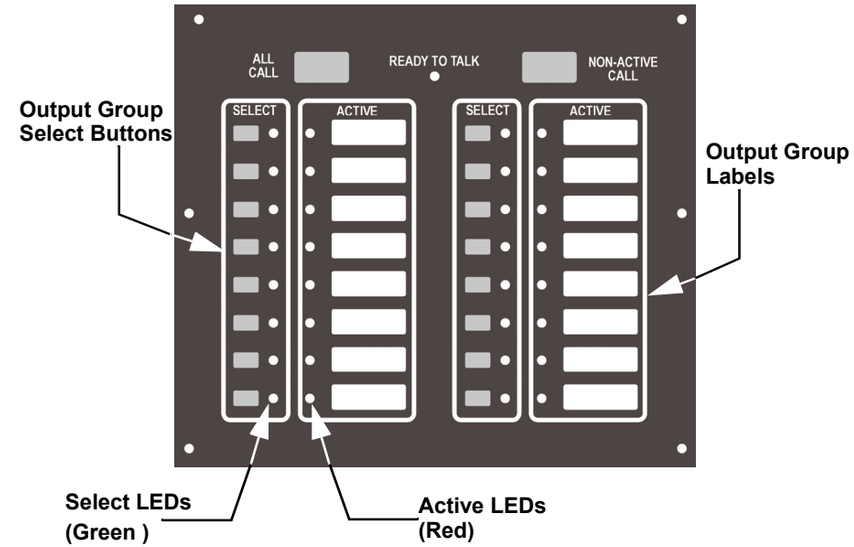

LED Conditions

LED	Color	States	Meaning
Select LEDs	Green	On	When the corresponding Output Group Select Button is pressed down.
		Off	When the corresponding Output Group Select Button is deselected.
Active LEDs	Red	On	When the corresponding output group is activated by the control panel.
		Off	When the corresponding output group is not activated.
Ready To Talk	Green	On	Indicates that the user can now speak into the microphone.
		Off	Indicates that the microphone is not ready to speak into. **Note:** the microphone must be keyed first befor the Ready to Talk LED will Light.

Operation	Task
Select Output Groups to for Microphone override.	Press the button corresponding to the output group you desire to activate with the microphone. Key the microphone, wait for the Ready-to-Talk LED to light, then deliver your verbal message.
Select all output group for microphone override.	Press the All Call button. Key the microphone, wait for the Ready-to-Talk LED to light, then deliver your verbal message.
Select all non-activated output groups for microphone override.	Press the Non-Active Call button then key the microphone. Wait for the Ready-to-Talk LED to light, then deliver your verbal message.